Reflex Sensor

TM55PA2

Part Number

- **Compact Housing**
- **Large Range**
- **Switching Distance Adjuster**

Technical Data

Optical Data	
Range	500 mm
Switching Hysteresis	< 15 %
Light Source	Infrared Light
Wave Length	880 nm
Service Life (T = +25 °C)	100000 h
Max. Ambient Light	10000 Lux
Opening Angle	12 °
Electrical Data	
Supply Voltage	10...30 V DC
Current Consumption (Ub = 24 V)	< 40 mA
Switching Frequency	1 kHz
Response Time	500 µs
Temperature Drift	< 10 %
Temperature Range	-25...60 °C
Switching Output Voltage Drop	< 2,5 V
PNP Switching Output/Switching Current	200 mA
Residual Current Switching Output	< 50 µA
Short Circuit Protection	yes
Reverse Polarity Protection	yes
Overload Protection	yes
Protection Class	III
Mechanical Data	
Adjustment	Potentiometer
Housing Material	Plastic
Full Encapsulation	yes
Degree of Protection	IP67
Connection	M12 × 1; 4-pin
PNP NO/NC antivalent	●
Connection Diagram No.	101
Control Panel No.	M 4
Suiting Connection Technology No.	2
Suiting Mounting Technology No.	360

The transmitter and the receiver are integrated into a single housing. The sensor evaluates transmitted light reflected back from the object. The output is switched as soon as an object passes the selected range. Bright objects reflect more light than dark objects, and can thus be recognized from greater distances.

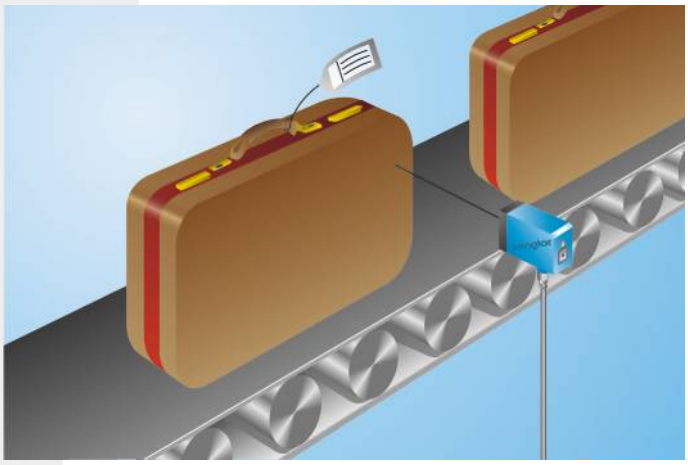

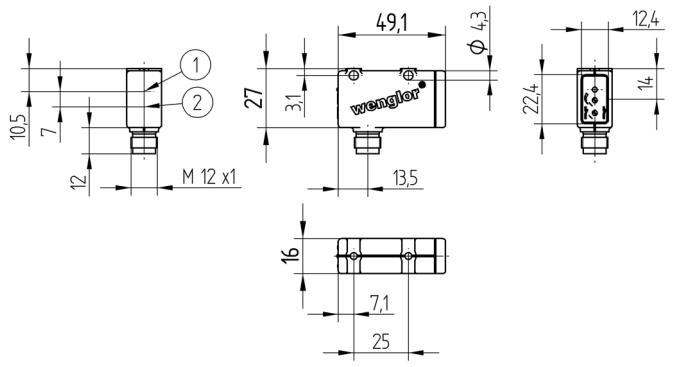

1 = Receiver Diode
2 = Transmitter Diode
All dimensions in mm (1 mm = 0.03937 Inch)

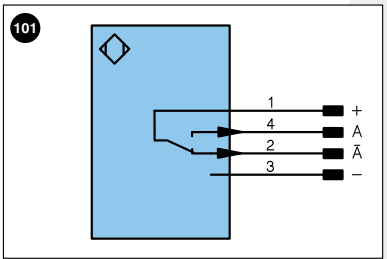

Legend

+	Supply Voltage +	
–	Supply Voltage 0 V	
~	Supply Voltage (AC Voltage)	
A	Switching Output	(NO)
Ā	Switching Output	(NC)
V	Contamination/Error Output	(NO)
V̄	Contamination/Error Output	(NC)
E	Input (analog or digital)	
T	Teach Input	
Z	Time Delay (activation)	
S	Shielding	
RxD	Interface Receive Path	
TxD	Interface Send Path	
RDY	Ready	
GND	Ground	
CL	Clock	
E/A	Output/Input programmable	
	IO-Link	

U	Test Input
Ū	Test Input inverted
W	Trigger Input
O	Analog Output
O–	Ground for the Analog Output
BZ	Block Discharge
AMV	Valve Output
a	Valve Control Output +
b	Valve Control Output 0 V
SY	Synchronization
E+	Receiver-Line
S+	Emitter-Line
⏚	Grounding
SnR	Switching Distance Reduction
Rx+/–	Ethernet Receive Path
Tx+/–	Ethernet Send Path
Bus	Interfaces-Bus A(+)/B(–)
La	Emitted Light disengageable

PoE	Power over Ethernet

Wire Colors according to DIN IEC 757

BK	Black
BN	Brown
RD	Red
OG	Orange
YE	Yellow
GN	Green
BU	Blue
VT	Violet
GY	Grey
WH	White
PK	Pink
GNYE	Green Yellow

Ctrl.Panel

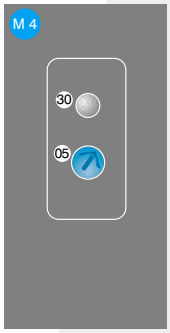

05 = Switching Distance Adjuster
30 = Switching Status/Contamination Warning

Specifications are subject to change without notice