Retro-Reflex Sensor
for Roller Conveyor Systems

OPT164
Part Number

- **Fully Encapsulated**
- **Large Working Range**
- **Recognition of high-gloss and jet black objects**

These sensors have been specially designed for use in accumulation roller conveyors. Their compact design allows for installation between rollers below the transport level. They are thus protected against mechanical damage.

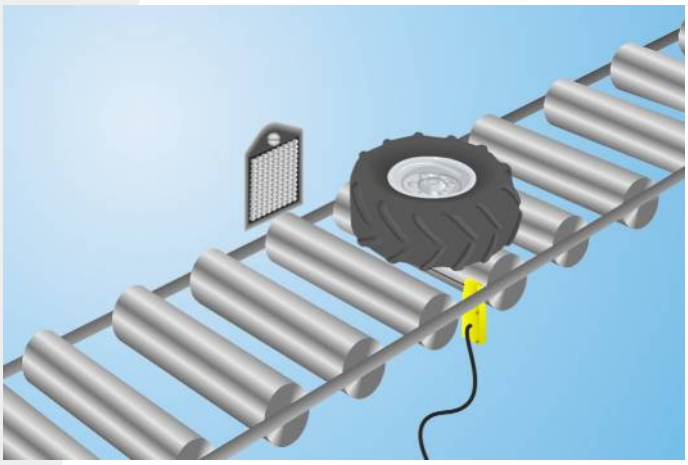

Technical Data

Optical Data	
Range	6500 mm
Reference Reflector/Reflex Foil	RQ100BA
Min. Distance to Reflector	100 mm
Switching Hysteresis	< 15 %
Light Source	Red Light
Polarization Filter	yes
Service Life (T = +25 °C)	100000 h
Max. Ambient Light	10000 Lux
Opening Angle	5 °
Two-Lens Optic	yes
Electrical Data	
Supply Voltage	18...30 V DC
Current Consumption Sensor (Ub = 24 V)	< 25 mA
Switching Frequency	100 Hz
Response Time	5 ms
Temperature Drift	< 10 %
Temperature Range	-25...60 °C
Switching Outputs	1
Switching Output Voltage Drop	< 0,8 V
PNP Switching Output/Switching Current	200 mA
Short Circuit Protection	yes
Reverse Polarity Protection	yes
Overload Protection	yes
Logic	no
Protection Class	III
Mechanical Data	
Housing Material	Plastic
Full Encapsulation	yes
Degree of Protection	IP54
Connection	M12 × 1; 4-pin
PNP NO	●
Connection Diagram No.	738
Control Panel No.	OP2
Suiting Connection Technology No.	2
Suiting Mounting Technology No.	420

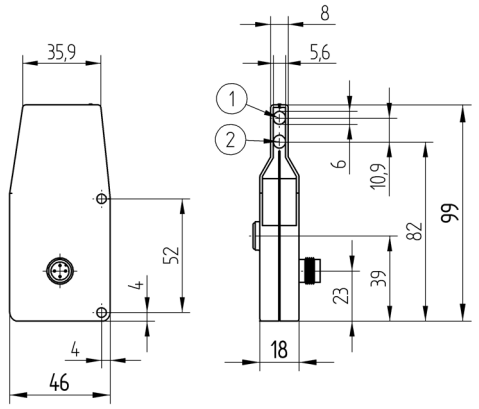

1 = Transmitter Diode
2 = Receiver Diode
All dimensions in mm (1 mm = 0.03937 Inch)

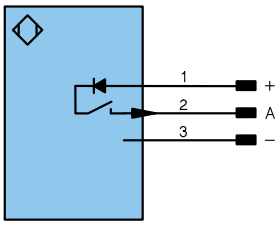

Legend

+	Supply Voltage +	U	Test Input	PoE	Power over Ethernet
–	Supply Voltage 0 V	Ū	Test Input inverted		
~	Supply Voltage (AC Voltage)	W	Trigger Input		
A	Switching Output (NO)	O	Analog Output		
Ā	Switching Output (NC)	O–	Ground for the Analog Output		Wire Colors according to DIN IEC 757
V	Contamination/Error Output (NO)	BZ	Block Discharge		
V̄	Contamination/Error Output (NC)	AMV	Valve Output	BK	Black
E	Input (analog or digital)	a	Valve Control Output +	BN	Brown
T	Teach Input	b	Valve Control Output 0 V	RD	Red
Z	Time Delay (activation)	SY	Synchronization	OG	Orange
S	Shielding	E+	Receiver-Line	YE	Yellow
RxD	Interface Receive Path	S+	Emitter-Line	GN	Green
TxD	Interface Send Path	⏚	Grounding	BU	Blue
RDY	Ready	SnR	Switching Distance Reduction	VT	Violet
GND	Ground	Rx+/–	Ethernet Receive Path	GY	Grey
CL	Clock	Tx+/–	Ethernet Send Path	WH	White
E/A	Output/Input programmable	Bus	Interfaces-Bus A(+)/B(–)	PK	Pink
	IO-Link	La	Emitted Light disengageable	GNYE	Green Yellow

Complementary Products

Reflector, Reflex Foil

Ctrl.Panel

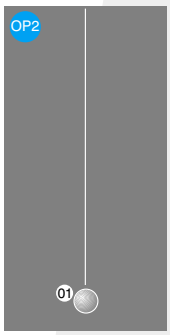

01 = Switching Status Indicator

Feasible reflector distance

Reflector type, mounting distance

RQ100BA	0,25...6,5 m	**ZRAE02B01**	0,2...1,8 m
RE18040BA	0,1...4 m	**ZRME03B01**	0,15...2 m
RQ84BA	0,25...5 m	**RF505**	0,15...1,9 m
RR84BA	0,2...5 m	**RF508**	0,15...1,9 m
RE9538BA	0,15...2 m	**RF258**	0,15...1,5 m
RR50_A	0,15...3 m	**ZRDF03K01**	0,1...3,5 m
RE6040BR	0,2...2,5 m	**ZRDF10K01**	0,1...4,5 m
RE8222BA	0,25...1,8 m		

Specifications are subject to change without notice