Fiber Optic Cable Sensor

ODX402P0008

Part Number

- **Menu-driven settings**
- **Recognition of Transparent Objects**
- **Reflex and barrier operation mode are possible**
- **Teach-In**

Technical Data

Optical Data	
Switching Hysteresis	< 15 %
Light Source	Red Light
Wave Length	660 nm
Service Life (T = +25 °C)	100000 h
Max. Ambient Light	10000 Lux
Electrical Data	
Supply Voltage	18...30 V DC
Current Consumption (Ub = 24 V)	< 40 mA
Switching Frequency	4 kHz
Response Time	125 µs
On-/Off-Delay	0...10000 ms
Temperature Drift	< 10 %
Temperature Range	-25...60 °C
Switching Output Voltage Drop	< 2,5 V
Switching Output / Switching Current	100 mA
Short Circuit Protection	yes
Reverse Polarity Protection	yes
Overload Protection	yes
Teach Mode	NT,MT,ZT,DT,FT,HT,TP
Protection Class	III
Mechanical Data	
Adjustment	Teach-In
Housing Material	Plastic
Degree of Protection	IP65
Connection	M8 × 1; 3-pin
DIN-Rail mounting	35 mm
Selectable menu language	●
Password Protection	●
Configurable as PNP/Push-Pull	●
NO/NC switchable	●
Connection Diagram No.	778
Control Panel No.	X4
Suiting Connection Technology No.	6
Suitable Fiber Optic Cable Adapter No.	3

wenglor Fiber Optic Cables can be adapted to these sensors. The modern OLED display assures easy, menu-driven sensor setup. Signal strengths and the switching threshold can be read from the display as numeric values or as a bar graph.

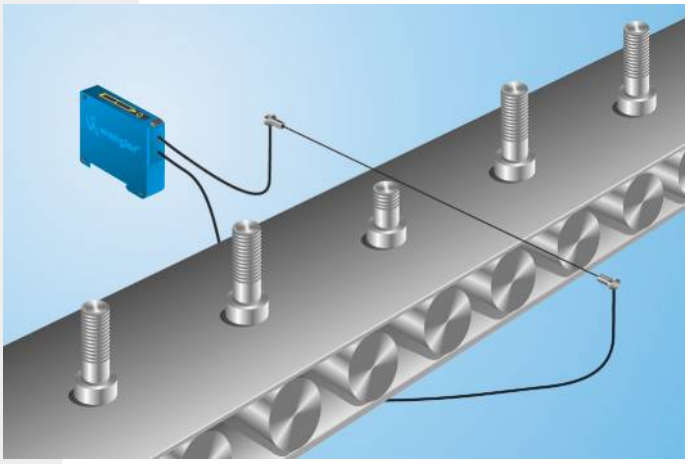

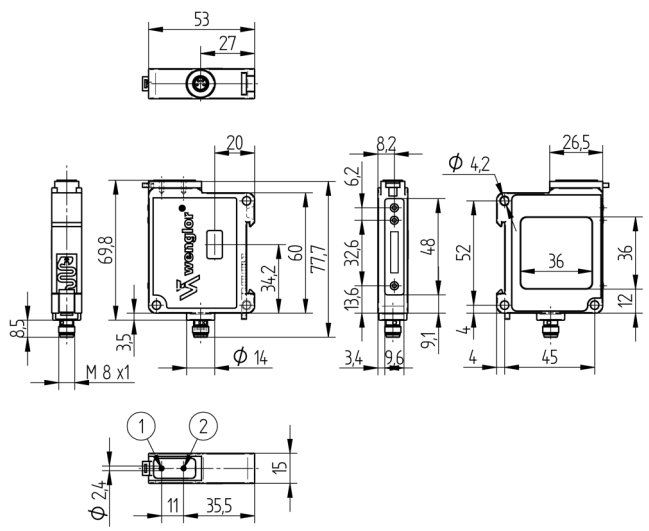

1 = Transmitter Diode
2 = Receiver Diode
All dimensions in mm (1 mm = 0.03937 Inch)

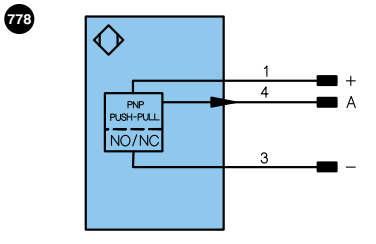

Legend

+	Supply Voltage +	U	Test Input	PoE	Power over Ethernet
–	Supply Voltage 0 V	Ū	Test Input inverted		
~	Supply Voltage (AC Voltage)	W	Trigger Input		
A	Switching Output (NO)	O	Analog Output		
Ā	Switching Output (NC)	O–	Ground for the Analog Output		Wire Colors according to DIN IEC 757
V	Contamination/Error Output (NO)	BZ	Block Discharge		
V̄	Contamination/Error Output (NC)	AMV	Valve Output	BK	Black
E	Input (analog or digital)	a	Valve Control Output +	BN	Brown
T	Teach Input	b	Valve Control Output 0 V	RD	Red
Z	Time Delay (activation)	SY	Synchronization	OG	Orange
S	Shielding	E+	Receiver-Line	YE	Yellow
RxD	Interface Receive Path	S+	Emitter-Line	GN	Green
TxD	Interface Send Path	⏚	Grounding	BU	Blue
RDY	Ready	SnR	Switching Distance Reduction	VT	Violet
GND	Ground	Rx+/–	Ethernet Receive Path	GY	Grey
CL	Clock	Tx+/–	Ethernet Send Path	WH	White
E/A	Output/Input programmable	Bus	Interfaces-Bus A(+)/B(–)	PK	Pink
	IO-Link	La	Emitted Light disengageable	GNYE	Green Yellow

Complementary Products

Glass Fiber Optic Cable
Plastic Fiber Optic Cable

Ctrl.Panel

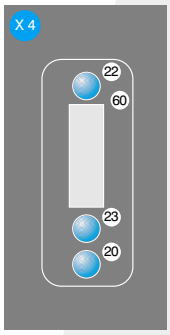

20 = Enter Button
22 = UP Button
23 = Down Button
60 = Display

Specifications are subject to change without notice