Retro-Reflex Sensor
for Clear Glass Recognition

K1R87PCT2
Part Number

- **Dynamic readjustment of the switching threshold**
- **Easy to install**
- **Recognition of Clear Glass**
- **Teach-In, external Teach-In, RS-232 Interface**

A reflector must be used in combination with these sensors. wenglor has the right retro-reflex light barrier for every application. Even crystal-clear objects and sheet products can be reliably recognized. The sensor is easy to install with its integrated M18 threaded fixation, and can be easily protected as well. Time delay can be activated by RS-232 interface.

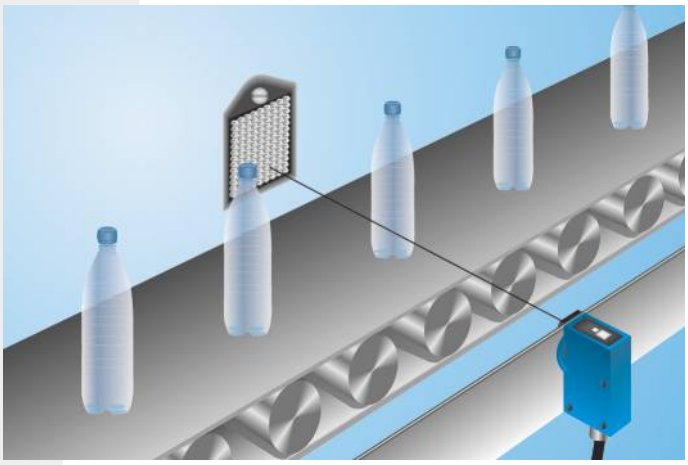

Technical Data

Optical Data	
Range	4000 mm
Reference Reflector/Reflex Foil	RQ100BA
Clear Glass Recognition	yes
Switching Hysteresis	< 5 %
Light Source	Red Light
Polarization Filter	yes
Service Life (T = +25 °C)	100000 h
Max. Ambient Light	10000 Lux
Opening Angle	5 °
Single-Lens Optic	yes
Electrical Data	
Supply Voltage	10...30 V DC
Current Consumption (Ub = 24 V)	< 40 mA
Switching Frequency	1700 Hz
Response Time	250 µs
On-/Off-Delay (RS-232)	0...5 s
Temperature Drift	< 5 %
Temperature Range	-10...60 °C
Switching Output Voltage Drop	< 2,5 V
PNP Switching Output/Switching Current	200 mA
Residual Current Switching Output	< 50 µA
Short Circuit Protection	yes
Reverse Polarity Protection	yes
Overload Protection	yes
Lockable	yes
Teach Mode	MT
Protection Class	III
Mechanical Data	
Adjustment	Teach-In
Housing Material	Plastic
Full Encapsulation	yes
Degree of Protection	IP67
Connection	M12 × 1; 4-pin
PNP NO/NC switchable	●
RS-232 with Adapterbox	●
Connection Diagram No.	152
Control Panel No.	M 7
Suiting Connection Technology No.	2
Suiting Mounting Technology No.	150 370

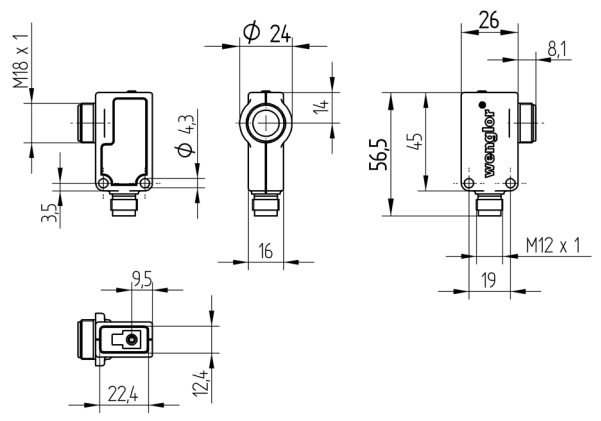

All dimensions in mm (1 mm = 0.03937 Inch)

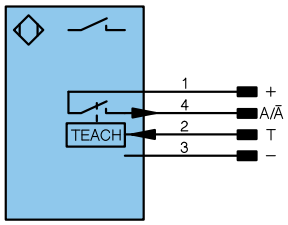

Legend

+	Supply Voltage +	U	Test Input	PoE	Power over Ethernet
–	Supply Voltage 0 V	Ū	Test Input inverted		
~	Supply Voltage (AC Voltage)	W	Trigger Input		
A	Switching Output (NO)	O	Analog Output		
Ā	Switching Output (NC)	O–	Ground for the Analog Output		Wire Colors according to DIN IEC 757
V	Contamination/Error Output (NO)	BZ	Block Discharge		
V̄	Contamination/Error Output (NC)	AMV	Valve Output	BK	Black
E	Input (analog or digital)	a	Valve Control Output +	BN	Brown
T	Teach Input	b	Valve Control Output 0 V	RD	Red
Z	Time Delay (activation)	SY	Synchronization	OG	Orange
S	Shielding	E+	Receiver-Line	YE	Yellow
RxD	Interface Receive Path	S+	Emitter-Line	GN	Green
TxD	Interface Send Path	⏚	Grounding	BU	Blue
RDY	Ready	SnR	Switching Distance Reduction	VT	Violet
GND	Ground	Rx+/–	Ethernet Receive Path	GY	Grey
CL	Clock	Tx+/–	Ethernet Send Path	WH	White
E/A	Output/Input programmable	Bus	Interfaces-Bus A(+)/B(–)	PK	Pink
	IO-Link	La	Emitted Light disengageable	GNYE	Green Yellow

Complementary Products

Adapterbox A232
Dust extraction tube STAUBTUBUS-01
Reflector, Reflex Foil

Ctrl.Panel

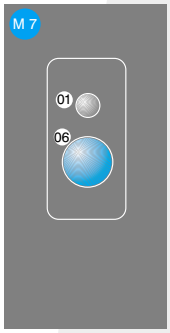

01 = Switching Status Indicator
06 = Teach Button

Feasible reflector distance

Reflector type, mounting distance

RQ100BA	0...4 m	RR25_M	0...1,4 m
RE18040BA	0...3 m	RR25KP	0...1 m
RQ84BA	0...4 m	RR21_M	0...1 m
RR84BA	0...4 m	ZRAE02B01	0...2 m
RE9538BA	0...1,5 m	ZRME01B01	0...0,6 m
RE6151BM	0...3,6 m	ZRME03B01	0...2,8 m
RR50_A	0...3 m	ZRMR02K01	0...0,8 m
RE6040BA	0...3,5 m	ZRMS02_01	0...0,9 m
RE8222BA	0...2 m	RF505	0...1,2 m
RR34_M	0...1,8 m	RF508	0...1,1 m
RE3220BM	0...1,8 m	RF258	0...1 m
RE6210BM	0...1,2 m	ZRDF__K01	0...4 m

Specifications are subject to change without notice