Reflex Sensor
for Measuring Tasks

HT66MGV80
Part Number

- **Digital, Analog and Error Output**
- **Go / No-Go testing possible**
- **Infrared Light**
- **Triple Beam Correction Principle**

These sensors are equipped with an analog output, as well as a digital output. The upper and lower switching points of the digital output can be adjusted with two potentiometers. The digital output is activated when an object is located within the window defined in this way.

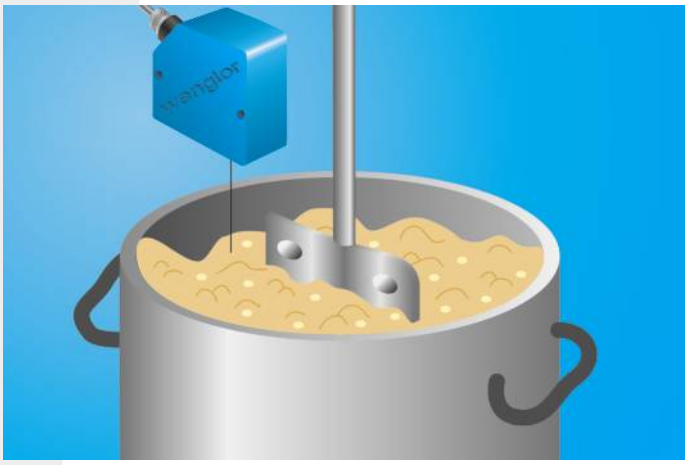

Technical Data

Optical Data	
Working Range	350...850 mm
Measuring Distance	600 mm
Measuring Range	500 mm
Resolution	see Table 1
Linearity	1 %
Switching Hysteresis	20 mm
Light Source	Infrared Light
Wave Length	880 nm
Service Life (T = +25 °C)	100000 h
Risk Group (EN 62471)	1
Max. Ambient Light	10000 Lux
Light Spot Diameter	see Table 1
Electrical Data	
Supply Voltage	18...30 V DC
Current Consumption (Ub = 24 V)	< 50 mA
Cut-Off Frequency	100 Hz
Response Time	5 ms
Temperature Drift	200 µm/K
Temperature Range	-10...60 °C
Switching Output Voltage Drop	< 2,5 V
PNP Switching Output/Switching Current	200 mA
Error Output Voltage Drop	< 2,5 V
PNP Error Output/Switching Current	200 mA
Analog Output	0...10 V
Output Current Analog Output	500 µA
Short Circuit Protection	yes
Reverse Polarity Protection	yes
Overload Protection	yes
Protection Class	III
Mechanical Data	
Housing Material	Plastic
Degree of Protection	IP67
Connection	M12 × 1; 8-pin
Error Output	●
PNP NO	●
Analog Output	●
Connection Diagram No.	506
Control Panel No.	T 5
Suiting Connection Technology No.	80
Suiting Mounting Technology No.	330

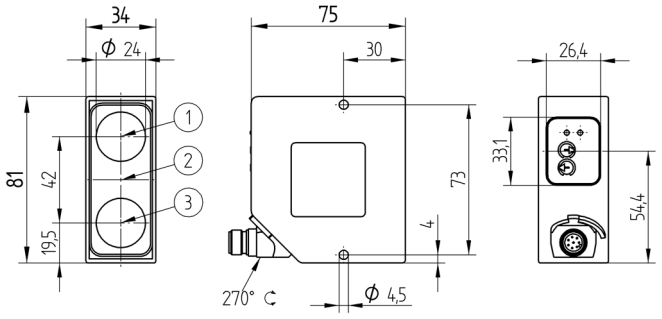

1 = Receiver Diode
2 = Transmitter Diode
3 = Receiver Diode
All dimensions in mm (1 mm = 0.03937 Inch)

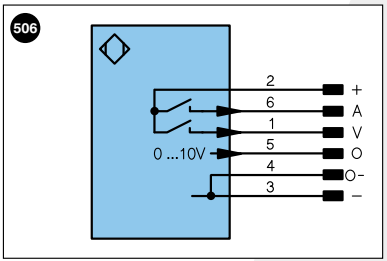

Legend

+	Supply Voltage +	
–	Supply Voltage 0 V	
~	Supply Voltage (AC Voltage)	
A	Switching Output	(NO)
Ā	Switching Output	(NC)
V	Contamination/Error Output	(NO)
V̄	Contamination/Error Output	(NC)
E	Input (analog or digital)	
T	Teach Input	
Z	Time Delay (activation)	
S	Shielding	
RxD	Interface Receive Path	
TxD	Interface Send Path	
RDY	Ready	
GND	Ground	
CL	Clock	
E/A	Output/Input programmable	
	IO-Link	

U	Test Input
Ū	Test Input inverted
W	Trigger Input
O	Analog Output
O–	Ground for the Analog Output
BZ	Block Discharge
AMV	Valve Output
a	Valve Control Output +
b	Valve Control Output 0 V
SY	Synchronization
E+	Receiver-Line
S+	Emitter-Line
⏚	Grounding
SnR	Switching Distance Reduction
Rx+/–	Ethernet Receive Path
Tx+/–	Ethernet Send Path
Bus	Interfaces-Bus A(+)/B(–)
La	Emitted Light disengageable

PoE	Power over Ethernet

Wire Colors according to DIN IEC 757

BK	Black
BN	Brown
RD	Red
OG	Orange
YE	Yellow
GN	Green
BU	Blue
VT	Violet
GY	Grey
WH	White
PK	Pink
GNYE	Green Yellow

Table 1

Working Distance	350 mm	600 mm	850 mm
Light Spot Diameter	6 mm	10 mm	20 mm
Resolution	0,3 mm	3 mm	8 mm

Complementary Products

Analog Evaluation Unit AW02

Ctrl.Panel

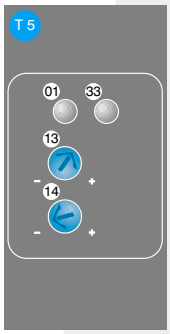

01 = Switching Status Indicator
13 = Upper Potentiometer
14 = Lower Potentiometer
33 = Analog Voltage Output-/ Error Warning

Error of Measurement

Typical characteristic curve based on Kodak white, 90 %

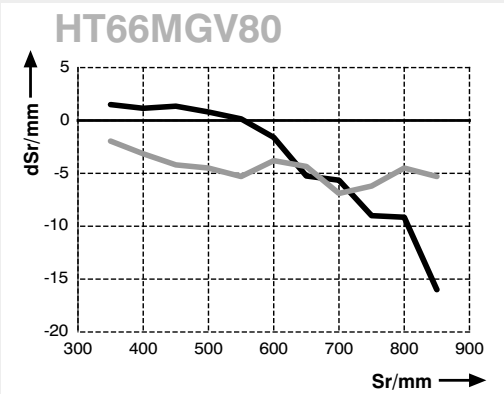

Sr = Switching Distance — black 6 %
dSr = Switching Distance Change — grey 18 %

Specifications are subject to change without notice